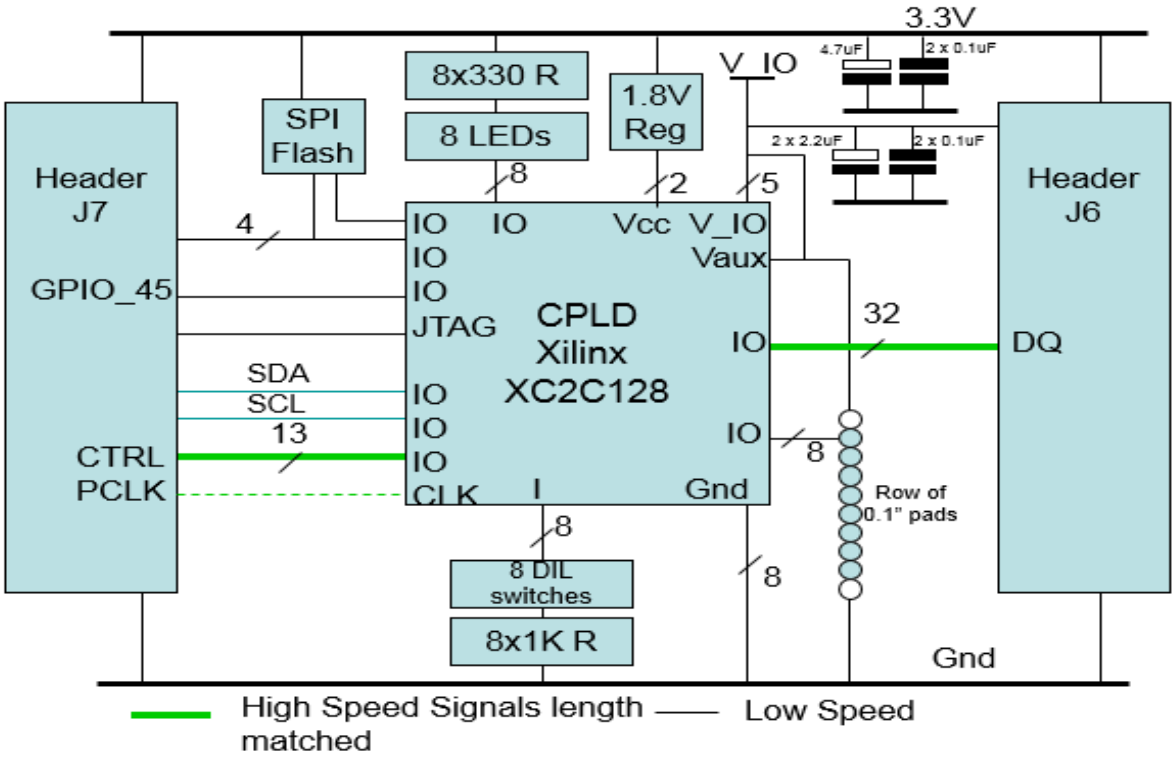

CPLD Accessory Board

PAGE 01	INDEX PAGE
PAGE 02	CPLD ACCESSORY BOARD

PCA: 121-60182-01
PCB: 600-60218-01
FAB DRW: 610-60210-01
ASSY DRW: 620-60218-01

CYPRESS SEMICONDUCTOR © 2014

Title	CYUSB3ACC-007 CPLD ACCESSORY BOARD	
Size: A	Document Number: 630-60214-01	Rev: 2.0
Date: Wednesday, August 27, 2014	Sheet 1 of 2	

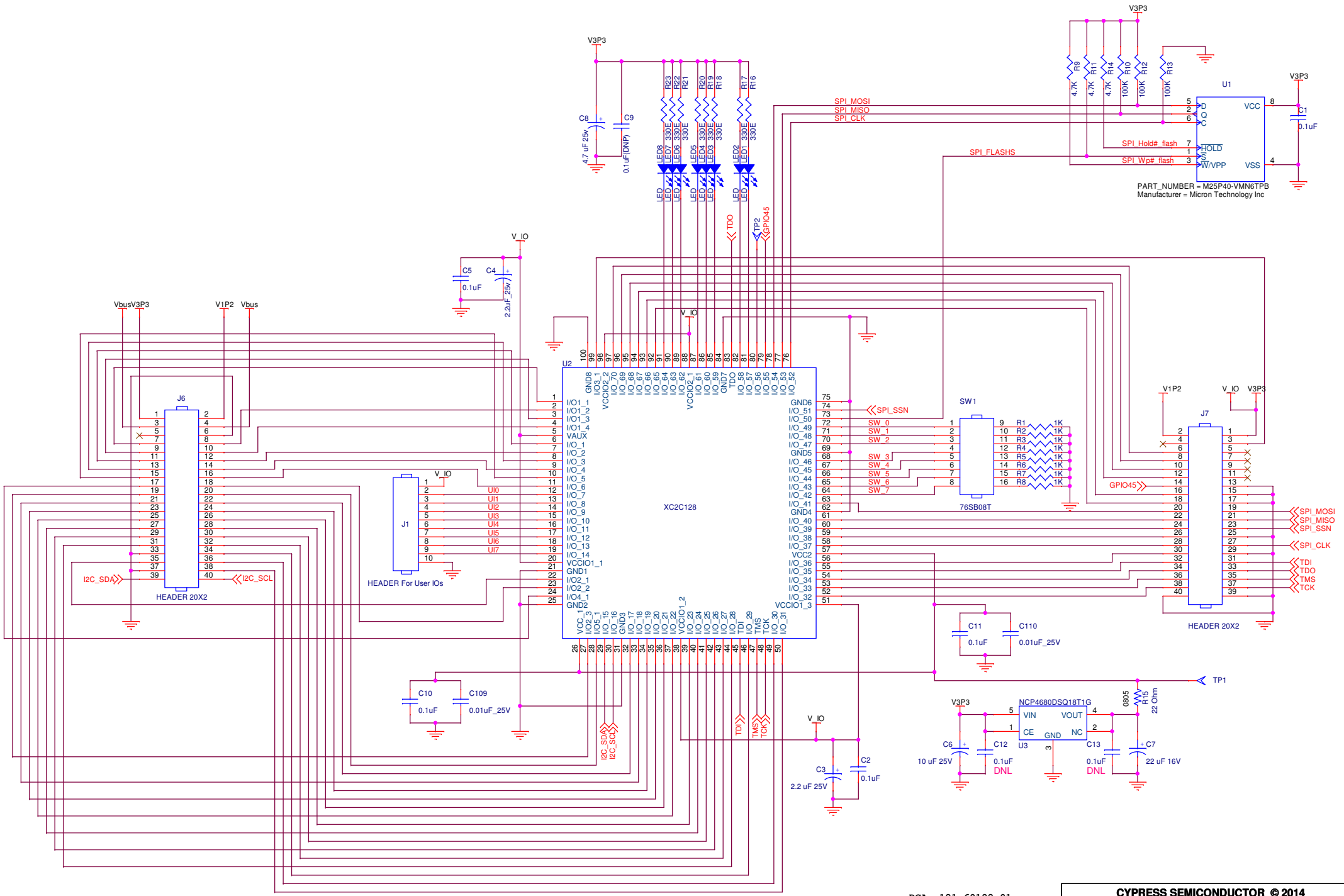

PCA: 121-60182-01
PCB: 600-60218-01
FAB DRW: 610-60210-01
ASSY DRW: 620-60218-01

CYPRESS SEMICONDUCTOR © 2014

Title	CYUSB3ACC-007 CPLD ACCESSORY BOARD	
Size: A	Document Number: 630-60214-01	Rev: 2.0
Date: Tuesday, August 26, 2014	Sheet 2 of 2	